ROTOBEC
TOUGH HANDLING EQUIPMENT

Combination Grapple
200C RT-1002-STDHT

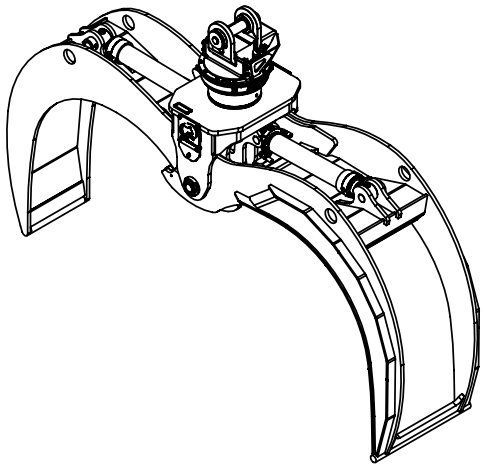

Max load:	n/a lb	n/a kg
Volume:	1.35 cord 8 ft	4.89 m³
Area tip to tip:	21.53 ft²	2.00 m²
Rotator lifting capacity:	100000 lb	45359 kg
Torque at relief pressure:	27910 lb-in 1810 psi	3153 Nm 125 bars
Weight:	5160 lb	2341 kg

Rotator	**Maximum pressure:** 5000 psi 345 bars	**Recommended flow:** 8 gpm 30 l/min
Rotator recommended flow will produce a speed of 20 rpm		

Cylinder	Diameter	Recommended pressure	Pressure range	Flow range	Lock valves
Standard	4 ″ (102 mm)	4250 psi (293 bars)	3500-5000 psi (241-345 bars)	32-42 gpm (121-159 l/min.)	no

Grapple cylinder maximum flow will theoretically produce a complete grapple open/close cycle in 6 seconds.

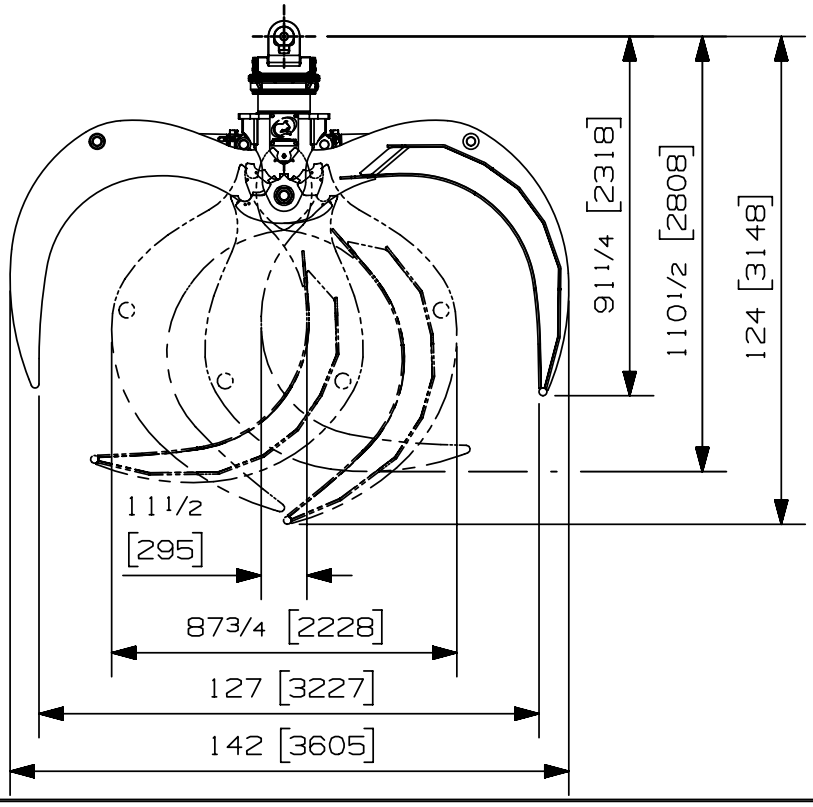

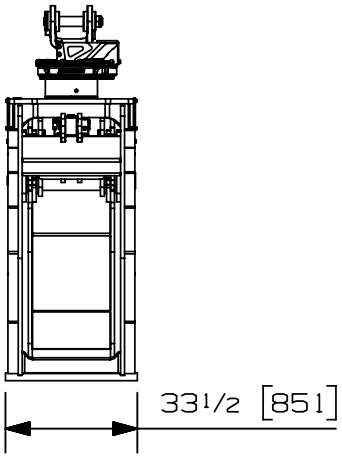

Options:
- Leveling plate (170 lbs / 77 kg)
- Load holding valve on cylinders (10 lbs / 5 kg)
-
-

web site: www.rotobec.com **email: rotobec@rotobec.com**

Rotobec Inc.: Head office serving OEM's and Eastern Canada Ph: (418) 383-3002 Fax: (418) 383-5334
Rotobec West: Branch serving Western Canada and Western USA Ph: (250) 765-1161 Fax: (250) 765-0035
Rotobec USA: Branch serving Eastern and Central USA Ph: (603) 444-2103 Fax: (603) 444-0327

We reserve the right to change specifications and to improve our products without notice or obligation.

07002-5926
14/01/19 D.L.

ROTOBEC
TOUGH HANDLING EQUIPMENT

Combination Grapple
175C RT-502-STDHT

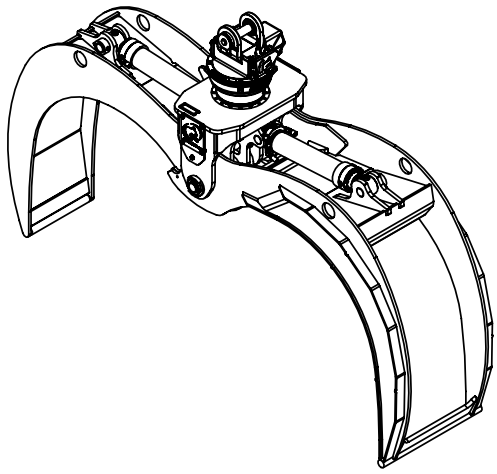

Max load:	n/a lb	n/a kg
Volume:	1.18 cord of 8 ft	4.28 m^3
Area tip to tip:	18.84 ft^2	1.75 m^2
Rotator lifting capacity:	50000 lb	22680 kg
Torque at relief pressure:	23260 lb-in 1810 psi	2628 Nm 125 bars
Weight:	3875 lb	1758 kg

Rotator	**Maximum pressure:** 5000 psi 345 bars	**Recommended flow:** 9 gpm 34 l/min
Rotator recommended flow will produce a maximum speed of 25 rpm		

Cylinder	Diameter	Recommended pressure	Pressure range	Flow range	Lock valves
Standard	4 " (102 mm)	4250 psi (293 bars)	3500-5000 psi (241-345 bars)	30-42 gpm (114-159 l/min.)	no

Grapple cylinder maximum flow will theoretically produce a complete grapple open/close cycle in 5 seconds.

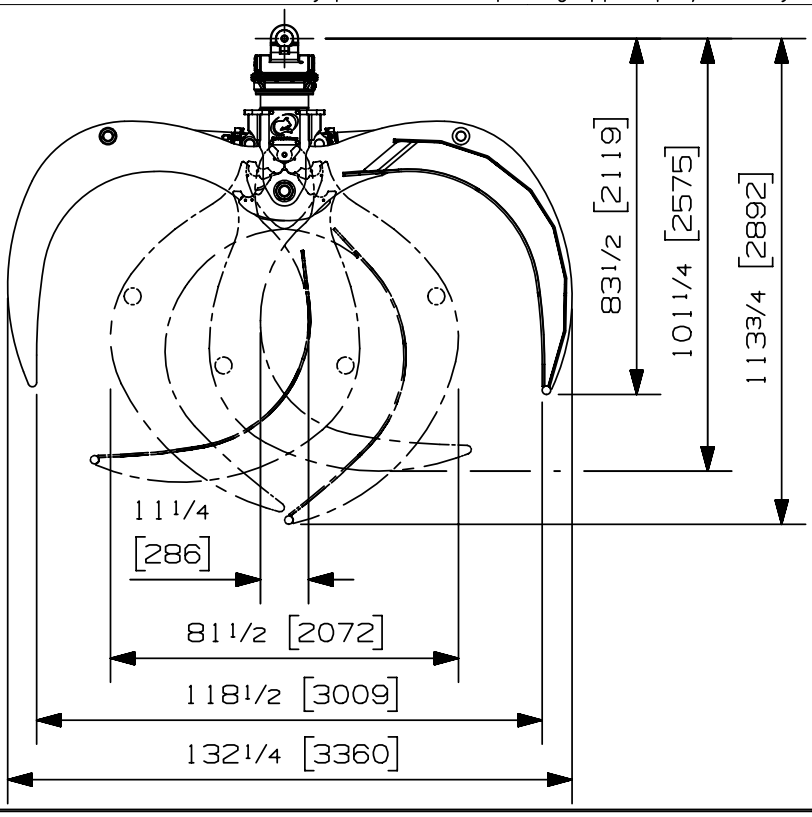

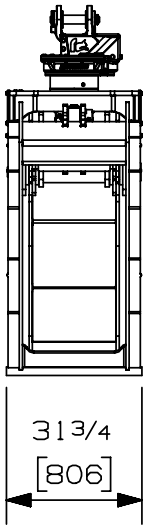

Options:
- Leveling plate (145 lbs / 66 kg)
- Load holding valve on cylinders (10 lbs / 5 kg)
-
-

web site: www.rotobec.com **email: rotobec@rotobec.com**

Rotobec Inc.: Head office serving OEM's and Eastern Canada Ph: (418) 383-3002 Fax: (418) 383-5334
Rotobec West: Branch serving Western Canada and Western USA Ph: (250) 765-1161 Fax: (250) 765-0035
Rotobec USA: Branch serving Eastern and Central USA Ph: (603) 444-2103 Fax: (603) 444-0327

We reserve the right to change specifications and to improve our products without notice or obligation.

07006-3040
01/10/18 D.L.

ROTOBEC
TOUGH HANDLING EQUIPMENT

Combination Grapple
175C RT-1002-STDHT

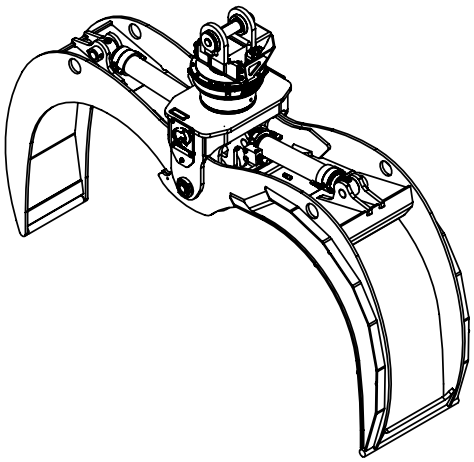

Max load:	n/a lb	n/a kg
Volume:	1.18 cord of 8ft.	4.28 m^3
Area tip to tip:	18.84 ft^2	1.75 m^2
Rotator lifting capacity:	100000 lb	45359 kg
Torque at relief pressure:	27910 lb-in 1810 psi	3153 Nm 125 bars
Weight:	4075 lb	1848 kg

Rotator	**Maximum pressure:** 5000 psi 345 bars	**Recommended flow:** 8 gpm 30 l/min
Rotator recommended flow will produce a speed of 20 rpm		

Cylinder	Diameter	Recommended pressure	Pressure range	Flow range	Lock valves
Standard	4 " (102 mm)	4250 psi (293 bars)	3500-5000 psi (241-345 bars)	30-42 gpm (114-159 l/min.)	no

Grapple cylinder maximum flow will theoretically produce a complete grapple open/close cycle in 5 seconds.

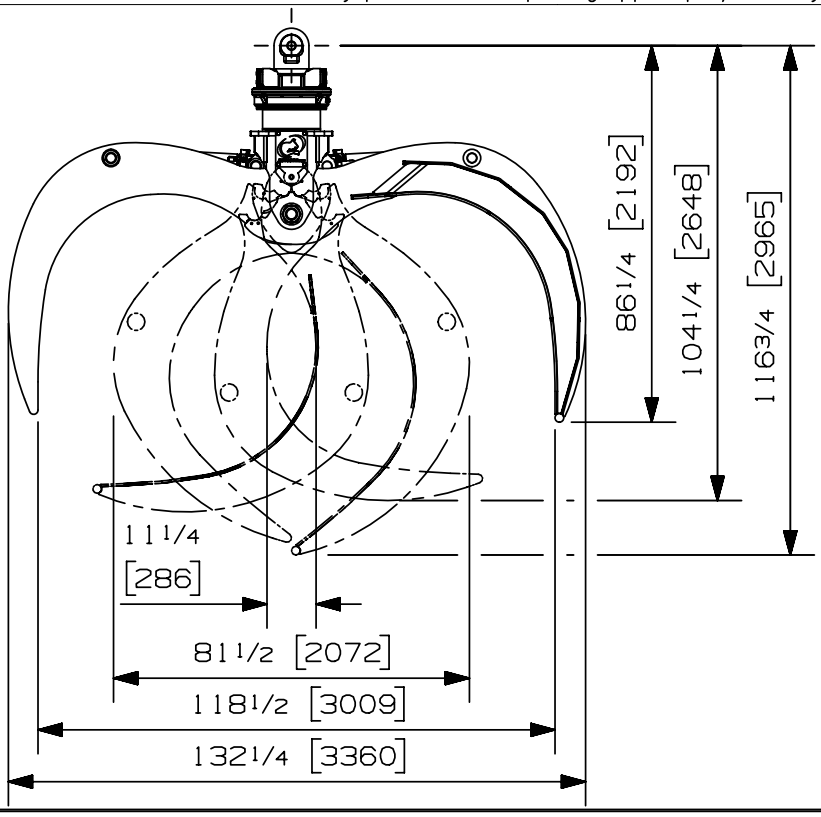

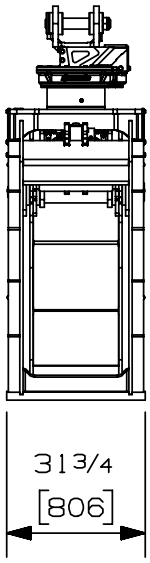

Options:
- Leveling plate (145 lbs / 66 kg)
- Load Holding valves on cylinders (10 lbs / 5 kg)
-
-

web site: www.rotobec.com **email: rotobec@rotobec.com**

Rotobec Inc.: Head office serving OEM's and Eastern Canada Ph: (418) 383-3002 Fax: (418) 383-5334
Rotobec West: Branch serving Western Canada and Western USA Ph: (250) 765-1161 Fax: (250) 765-0035
Rotobec USA: Branch serving Eastern and Central USA Ph: (603) 444-2103 Fax: (603) 444-0327

We reserve the right to change specifications and to improve our products without notice or obligation.

07004-7343
01/10/18 D.L.

ROTOBEC
TOUGH HANDLING EQUIPMENT

Combination Grapple
150C RT-502-STDHT

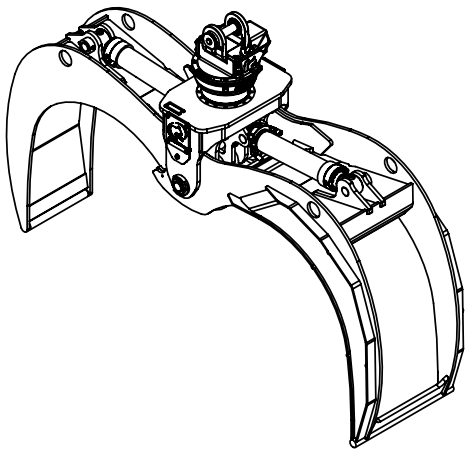

Max load:	n/a lb	n/a kg
Volume:	1.00 cord 8 ft	3.62 m^3
Area tip to tip:	16.15 ft^2	1.50 m^2
Rotator lifting capacity:	50000 lb	22680 kg
Torque at relief pressure:	23260 lb-in 1810 psi	2628 Nm 125 bars
Weight:	3825 lb	1735 kg

Rotator	**Maximum pressure:** 5000 psi 345 bars	**Recommended flow:** 9 gpm 34 l/min
Rotator recommended flow will produce a speed of 25 rpm		

Cylinder	Diameter	Recommended pressure	Pressure range	Flow range	Lock valves
Standard	4 " (102 mm)	4250 psi (293 bars)	3500-5000 psi (241-345 bars)	30-42 gpm (114-159 l/min.)	no

Grapple cylinder maximum flow will theoretically produce a complete grapple open/close cycle in 5 seconds.

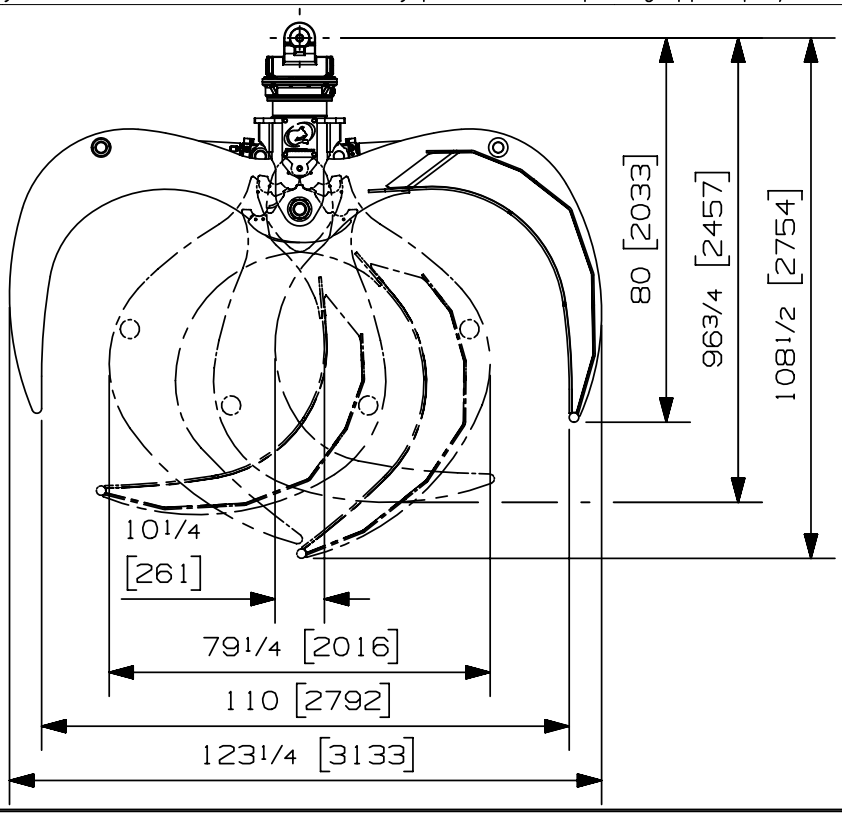

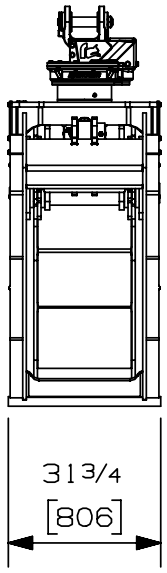

Options:
- Leveling plate (145 lbs / 66 kg)
- Load holding valve on cylinders (10 lbs / 5 kg)
-
-

web site: www.rotobec.com **email: rotobec@rotobec.com**

Rotobec Inc.: Head office serving OEM's and Eastern Canada Ph: (418) 383-3002 Fax: (418) 383-5334
Rotobec West: Branch serving Western Canada and Western USA Ph: (250) 765-1161 Fax: (250) 765-0035
Rotobec USA: Branch serving Eastern and Central USA Ph: (603) 444-2103 Fax: (603) 444-0327

We reserve the right to change specifications and to improve our products without notice or obligation.

07006-3039
01/10/18 D.L.

ROTOBEC
TOUGH HANDLING EQUIPMENT

Combination Grapple
150C RT-1002-STDHT

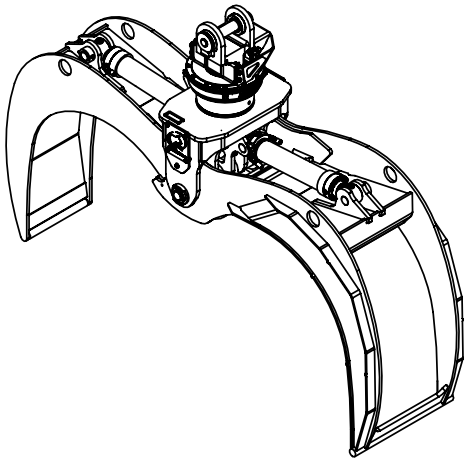

Max load:	n/a lb	n/a kg
Volume:	1.00 cord 8 ft	3.62 m^3
Area tip to tip:	16.14 ft^2	1.50 m^2
Rotator lifting capacity:	100000 lb	45359 kg
Torque at relief pressure:	27910 lb-in 1810 psi	3153 Nm 125 bars
Weight:	4020 lb	1823 kg

Rotator	**Maximum pressure:** 5000 psi 345 bars	**Recommended flow:** 8 gpm 30 l/min
Rotator recommended flow will produce a speed of 20 rpm		

Cylinder	Diameter	Recommended pressure	Pressure range	Flow range	Lock valves
Standard	4 " (102 mm)	4250 psi (293 bars)	3500-5000 psi (241-345 bars)	30-42 gpm (114-159 l/min.)	no

Grapple cylinder maximum flow will theoretically produce a complete grapple open/close cycle in 5 seconds.

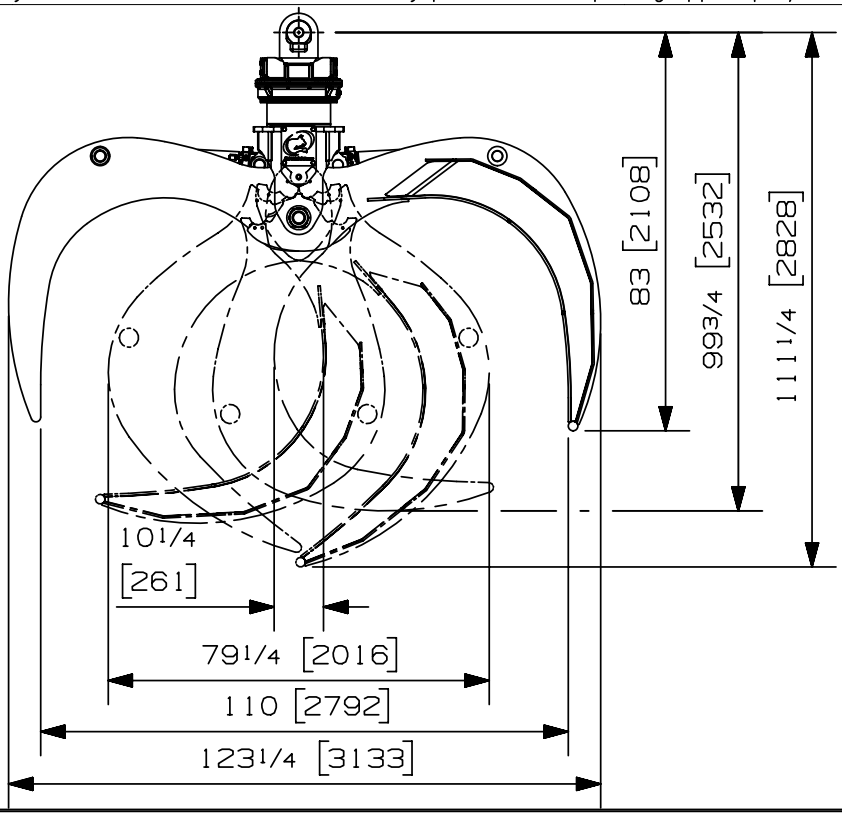

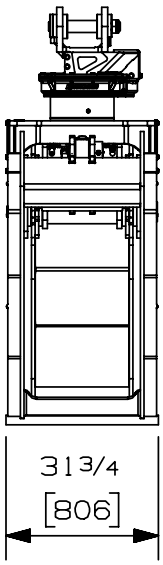

Options:
- Leveling plate (145 lbs / 66 kg)
- Load holding valve on cylinders (10 lbs / 5 kg)
-
-

web site: www.rotobec.com **email: rotobec@rotobec.com**

Rotobec Inc.: Head office serving OEM's and Eastern Canada Ph: (418) 383-3002 Fax: (418) 383-5334
Rotobec West: Branch serving Western Canada and Western USA Ph: (250) 765-1161 Fax: (250) 765-0035
Rotobec USA: Branch serving Eastern and Central USA Ph: (603) 444-2103 Fax: (603) 444-0327

We reserve the right to change specifications and to improve our products without notice or obligation.

07003-9279
01/10/18 D.L.

ROTOBEC
TOUGH HANDLING EQUIPMENT

Combination Grapple
125C RT-252

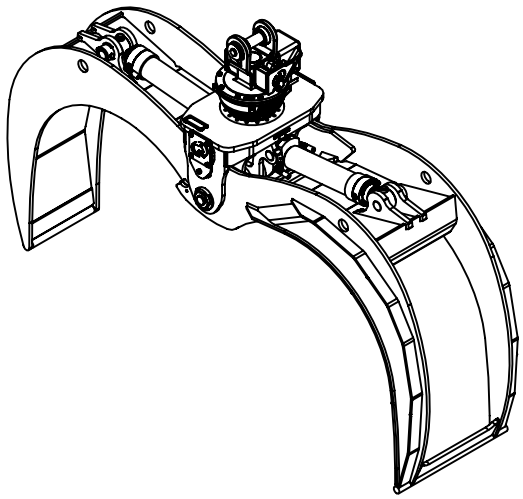

Max load:	n/a lb	n/a kg
Volume:	.84 cord of 8ft.	3.04 m^3
Area tip to tip:	13.45 ft^2	1.25 m^2
Rotator lifting capacity:	25000 lb	11340 kg
Torque at relief pressure:	16150 lb-in 1450 psi	1825 Nm 100 bars
Weight:	2575 lb	1168 kg

Rotator	**Maximum pressure:** 5000 psi 345 bars	**Recommended flow:** 9 gpm 34 l/min
Rotator recommended flow will produce a speed of 30 rpm		

Cylinder	Diameter		Recommended pressure	Pressure range	Flow range	Lock valves
Standard	3 1/2 "	(89 mm)	4250 psi (293 bars)	3500-5000 psi (241-345 bars)	21-31 gpm (79-117 l/min.)	no

Grapple cylinder maximum flow will theoretically produce a complete grapple open/close cycle in 4 seconds.

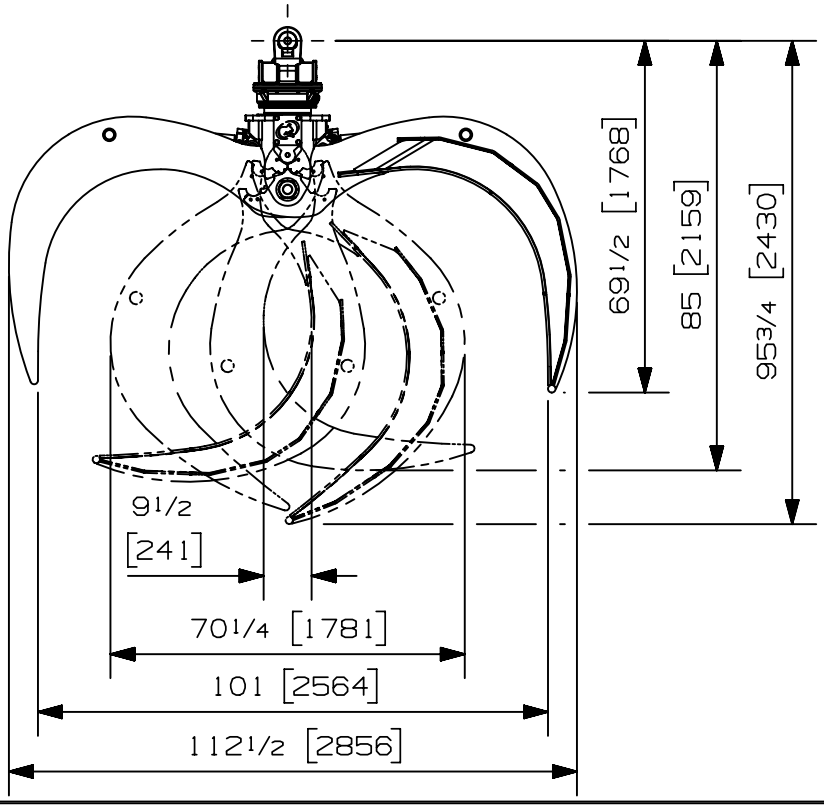

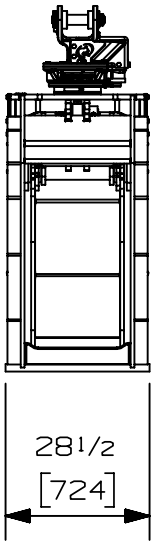

Options:
- Leveling plate (120 lbs / 54 kg)
- Load holding valve on cylinders (9 lbs / 4 kg)
-
-

web site: www.rotobec.com **email: rotobec@rotobec.com**

Rotobec Inc.: Head office serving OEM's and Eastern Canada Ph: (418) 383-3002 Fax: (418) 383-5334
Rotobec West: Branch serving Western Canada and Western USA Ph: (250) 765-1161 Fax: (250) 765-0035
Rotobec USA: Branch serving Eastern and Central USA Ph: (603) 444-2103 Fax: (603) 444-0327

We reserve the right to change specifications and to improve our products without notice or obligation.

07003-2663
19/09/18 D.L.

ROTOBEC
TOUGH HANDLING EQUIPMENT

Combination Grapple
125C RT-322-HT

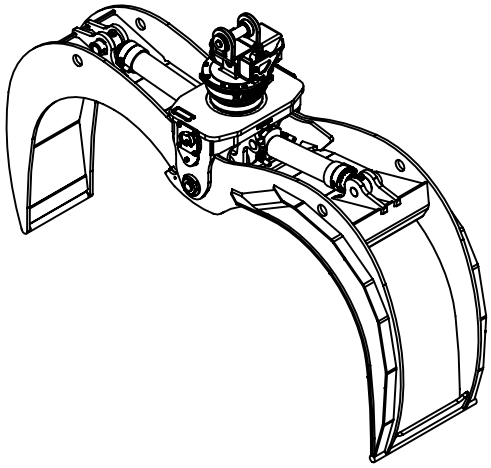

Max load:	n/a lb	n/a kg
Volume:	.84 cord of 8ft	3.04 m^3
Area tip to tip:	13.45 ft^2	1.25 m^2
Rotator lifting capacity:	32000 lb	14515 kg
Torque at relief pressure:	20160 lb-in 1810 psi	2278 Nm 125 bars
Weight:	2620 lb	1188 kg

Rotator	**Maximum pressure:** 5000 psi 345 bars	**Recommended flow:** 9 gpm 34 l/min
Rotator recommended flow will produce a speed of 30 rpm		

Cylinder	Diameter	Recommended pressure	Pressure range	Flow range	Lock valves
Standard	3 1/2 " (89 mm)	4250 psi (293 bars)	3500-5000 psi (241-345 bars)	21-31 gpm (79-117 l/min.)	no

Grapple cylinder maximum flow will theoretically produce a complete grapple open/close cycle in 4 seconds.

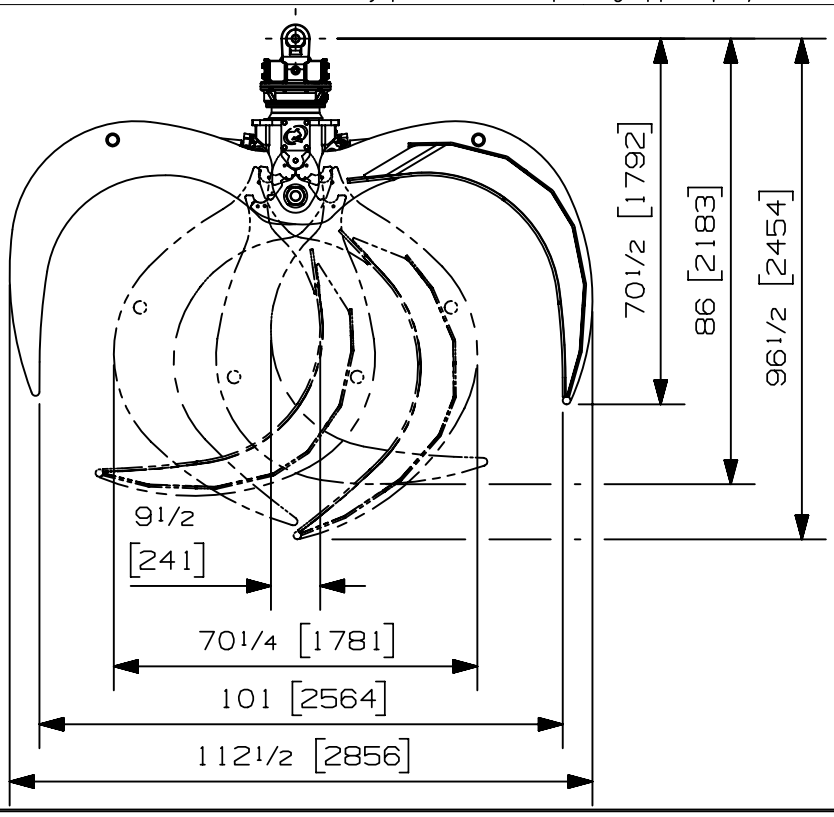

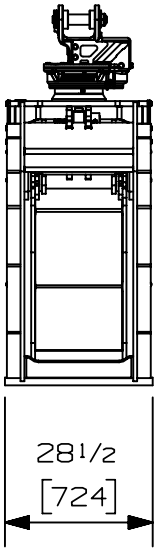

Options:
- Leveling plate (120 lbs / 54 kg)
- Load holding valve on cylinders (9 lbs / 4 kg)
-
-

web site: www.rotobec.com **email: rotobec@rotobec.com**

Rotobec Inc.: Head office serving OEM's and Eastern Canada Ph: (418) 383-3002 Fax: (418) 383-5334
Rotobec West: Branch serving Western Canada and Western USA Ph: (250) 765-1161 Fax: (250) 765-0035
Rotobec USA: Branch serving Eastern and Central USA Ph: (603) 444-2103 Fax: (603) 444-0327

We reserve the right to change specifications and to improve our products without notice or obligation.

07006-3009
19/09/18 D.L.

ROTOBEC
TOUGH HANDLING EQUIPMENT

Combination Grapple
125C RT-502-STDHT

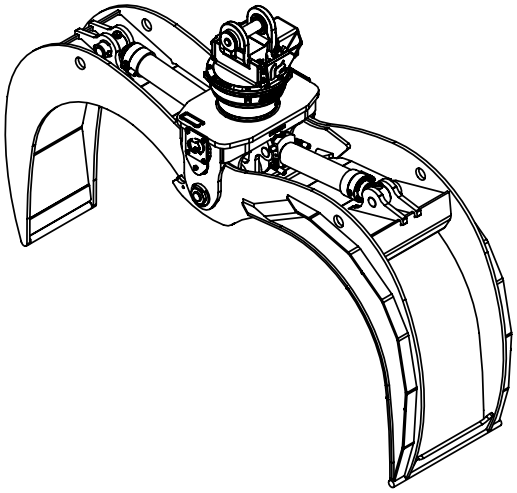

Max load:	n/a lb	n/a kg
Volume:	.84 cord of 8 ft	3.04 m^3
Area tip to tip:	13.45 ft^2	1.25 m^2
Rotator lifting capacity:	50000 lb	22680 kg
Torque at relief pressure:	23260 lb-in 1810 psi	2628 Nm 125 bars
Weight:	2760 lb	1252 kg

Rotator	**Maximum pressure:** 5000 psi 345 bars	**Recommended flow:** 9 gpm 34 l/min
Rotator recommended flow will produce a maximum speed of 25 rpm		

Cylinder	Diameter	Recommended pressure	Pressure range	Flow range	Lock valves
Standard	3 1/2 " (89 mm)	4250 psi (293 bars)	3500-5000 psi (241-345 bars)	21-31 gpm (79-117 l/min.)	no

Grapple cylinder maximum flow will theoretically produce a complete grapple open/close cycle in 4 seconds.

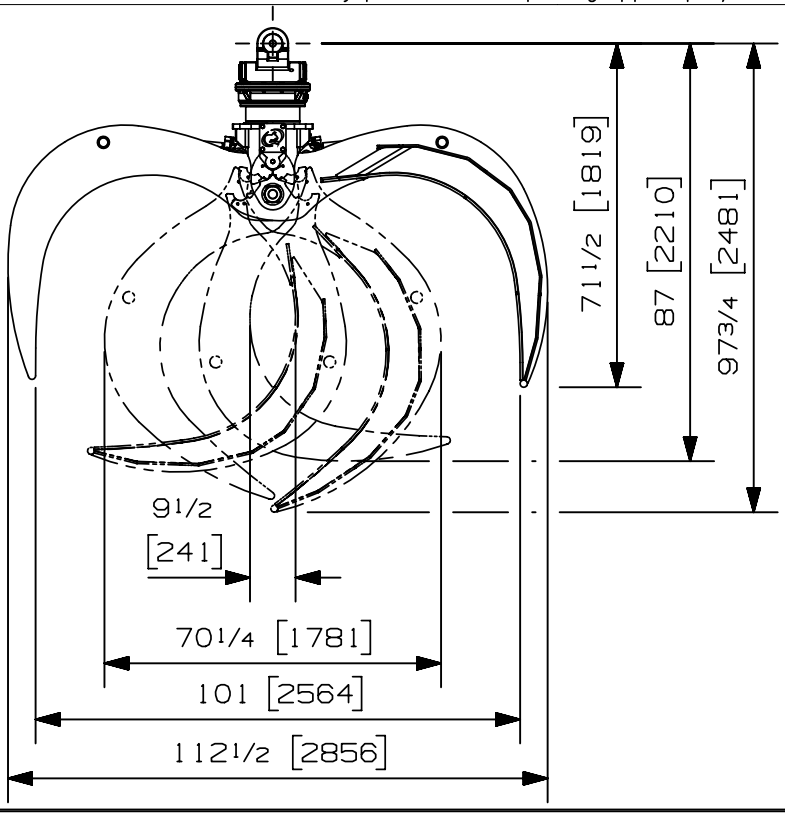

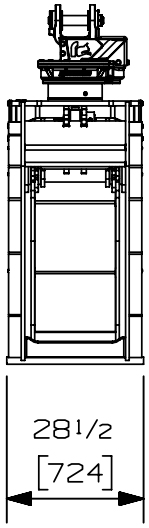

Options:
- Leveling plate (120 lbs / 54 kg)
- Load holding valve on cylinders (9 lbs / 4 kg)
-
-

web site: www.rotobec.com **email: rotobec@rotobec.com**

Rotobec Inc.: Head office serving OEM's and Eastern Canada Ph: (418) 383-3002 Fax: (418) 383-5334
Rotobec West: Branch serving Western Canada and Western USA Ph: (250) 765-1161 Fax: (250) 765-0035
Rotobec USA: Branch serving Eastern and Central USA Ph: (603) 444-2103 Fax: (603) 444-0327

We reserve the right to change specifications and to improve our products without notice or obligation.

07006-3008
19/09/18 D.L.

ROTOBEC
TOUGH HANDLING EQUIPMENT

Combination Grapple
100C RT-252

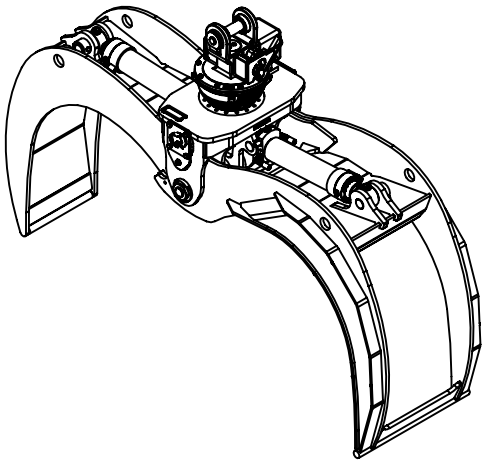

Max load:	n/a lb	n/a kg
Volume:	.67 cord of 8 ft	2.43 m^3
Area tip to tip:	10.76 ft^2	1.00 m^2
Rotator lifting capacity:	25000 lb	11340 kg
Torque at relief pressure:	16150 lb-in 1450 psi	1825 Nm 100 bars
Weight:	2375 lb	1077 kg

Rotator	**Maximum pressure:** 5000 psi 345 bars	**Recommended flow:** 9 gpm 34 l/min
Rotator recommended flow will produce a maximum speed of 30 rpm		

Cylinder	Diameter	Recommended pressure	Pressure range	Flow range	Lock valves
Standard	3 1/2 " (89 mm)	4250 psi (293 bars)	3500-5000 psi (241-345 bars)	21-31 gpm (79-117 l/min.)	no

Grapple cylinder maximum flow will theoretically produce a complete grapple open/close cycle in 4 seconds.

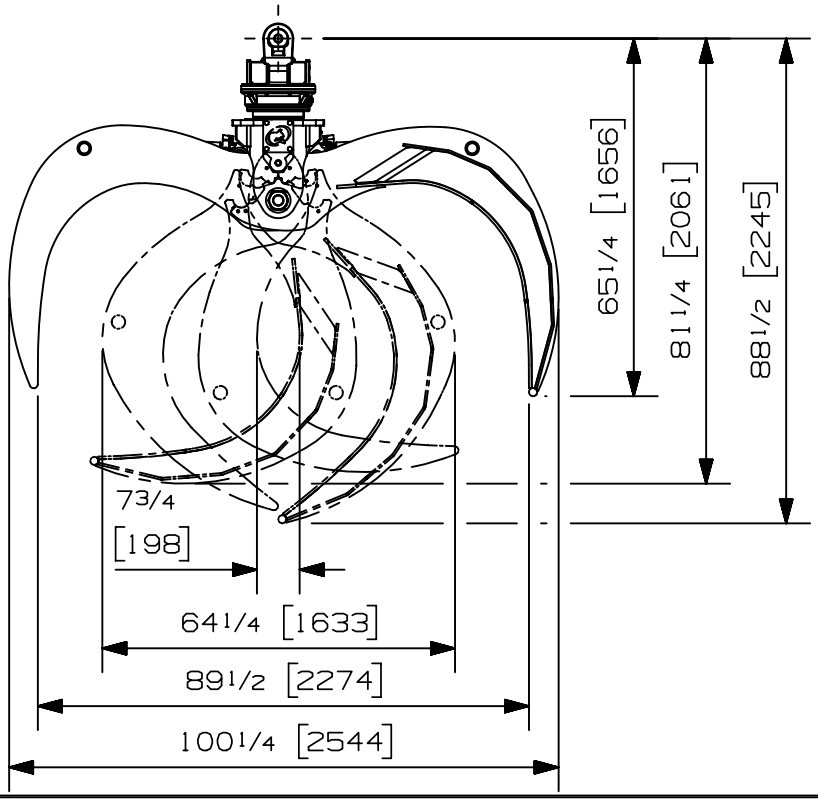

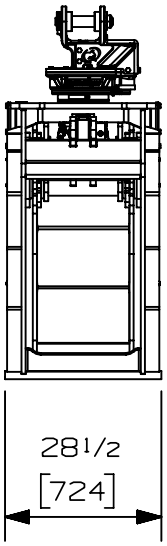

Options:
- Leveling plate (120 lbs / 54 kg)
- Load holding valve on cylinders (9 lbs / 4 kg)
-
-

web site: www.rotobec.com **email: rotobec@rotobec.com**

Rotobec Inc.: Head office serving OEM's and Eastern Canada Ph: (418) 383-3002 Fax: (418) 383-5334
Rotobec West: Branch serving Western Canada and Western USA Ph: (250) 765-1161 Fax: (250) 765-0035
Rotobec USA: Branch serving Eastern and Central USA Ph: (603) 444-2103 Fax: (603) 444-0327

We reserve the right to change specifications and to improve our products without notice or obligation.

07008-2886
19/09/18 D.L.

ROTOBEC
TOUGH HANDLING EQUIPMENT

Combination Grapple
100C RT-322-HT

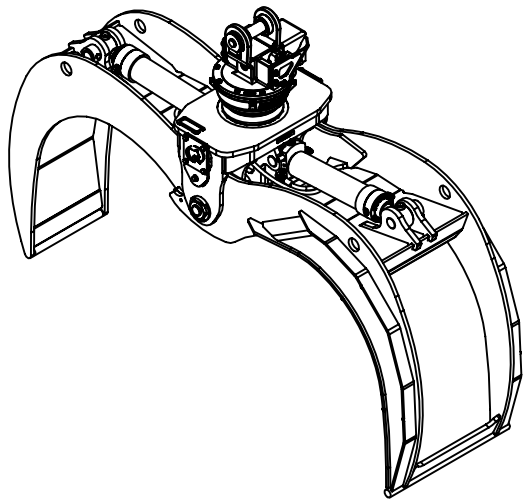

Max load:	n/a lb	n/a kg
Volume:	.67 cord of 8ft	2.44 m^3
Area tip to tip:	10.76 ft^2	1.00 m^2
Rotator lifting capacity:	32000 lb	14515 kg
Torque at relief pressure:	20160 lb-in 1810 psi	2278 Nm 125 bars
Weight:	2420 lb	1098 kg

Rotator	**Maximum pressure:** 5000 psi 345 bars	**Recommended flow:** 9 gpm 34 l/min
Rotator recommended flow will produce a speed of 30 rpm		

Cylinder	Diameter	Recommended pressure	Pressure range	Flow range	Lock valves
Standard	3 1/2 " (89 mm)	4250 psi (293 bars)	3500-5000 psi (241-345 bars)	21-31 gpm (79-117 l/min.)	no

Grapple cylinder maximum flow will theoretically produce a complete grapple open/close cycle in 4 seconds.

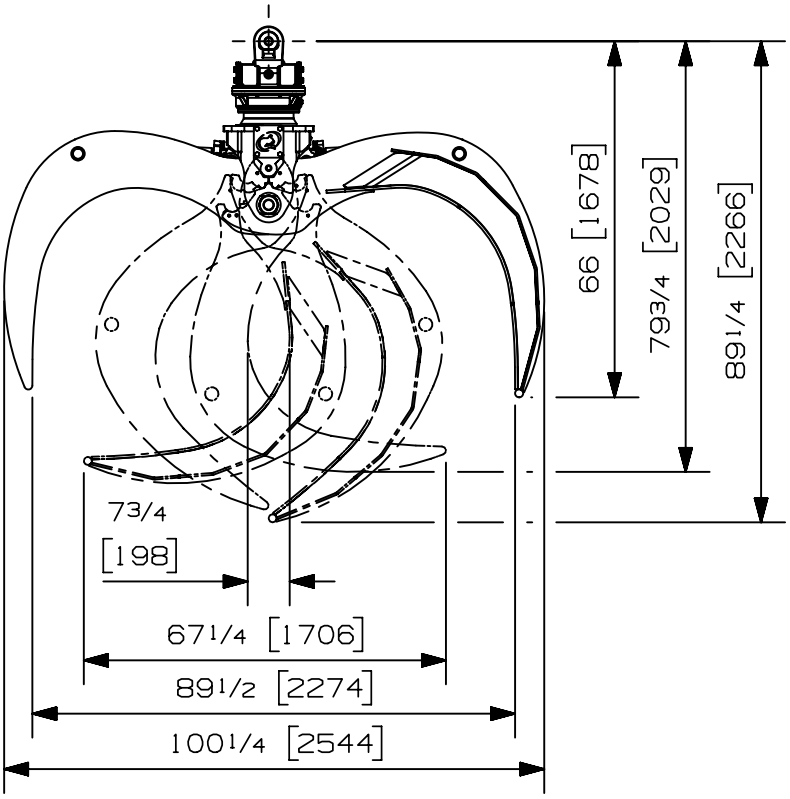

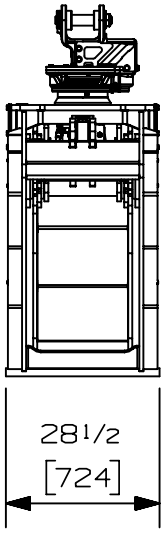

Options:
- Leveling plate (120 lbs / 54 kg)
- Load holding valve on cylinders (9 lbs / 4kg)
-
-

web site: www.rotobec.com **email: rotobec@rotobec.com**

Rotobec Inc.: Head office serving OEM's and Eastern Canada Ph: (418) 383-3002 Fax: (418) 383-5334
Rotobec West: Branch serving Western Canada and Western USA Ph: (250) 765-1161 Fax: (250) 765-0035
Rotobec USA: Branch serving Eastern and Central USA Ph: (603) 444-2103 Fax: (603) 444-0327

We reserve the right to change specifications and to improve our products without notice or obligation.

07007-8457
19/09/18 D.L.

ROTOBEC
TOUGH HANDLING EQUIPMENT

Combination Grapple
100C RT-502-STDHT

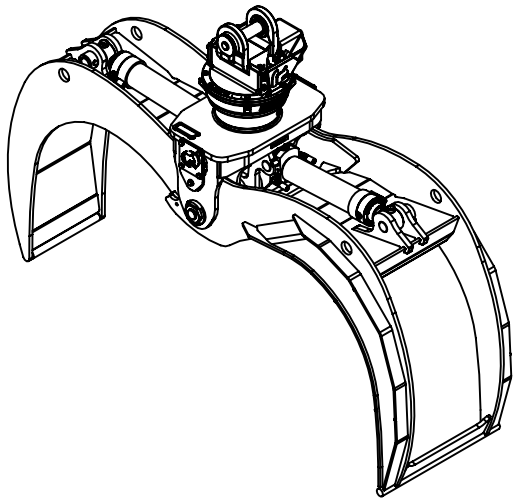

Max load:	n/a lb	n/a kg
Volume:	.67 cord of 8 ft	2.43 m^3
Area tip to tip:	10.76 ft^2	1.00 m^2
Rotator lifting capacity:	50000 lb	22680 kg
Torque at relief pressure:	23260 lb-in 1810 psi	2628 Nm 125 bars
Weight:	2560 lb	1161 kg

Rotator	**Maximum pressure:** 5000 psi 345 bars	**Recommended flow:** 9 gpm 34 l/min
Rotator recommended flow will produce a maximum speed of 25 rpm		

Cylinder	Diameter	Recommended pressure	Pressure range	Flow range	Lock valves
Standard	3 1/2 " (89 mm)	4250 psi (293 bars)	3500-5000 psi (241-345 bars)	21-31 gpm (79-117 l/min.)	no

Grapple cylinder maximum flow will theoretically produce a complete grapple open/close cycle in 4 seconds.

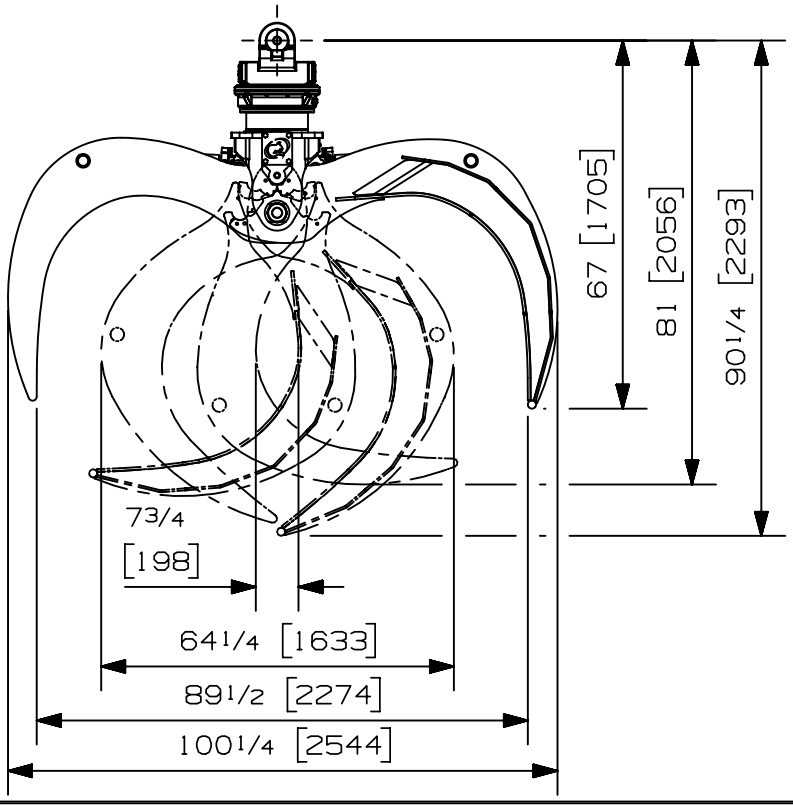

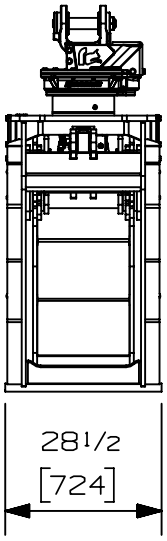

Options:
- Leveling plate (120 lbs / 54 kg)
- Load holding valve on cylinders (9 lbs / 4 kg)
-
-

web site: www.rotobec.com **email: rotobec@rotobec.com**

Rotobec Inc.: Head office serving OEM's and Eastern Canada Ph: (418) 383-3002 Fax: (418) 383-5334
Rotobec West: Branch serving Western Canada and Western USA Ph: (250) 765-1161 Fax: (250) 765-0035
Rotobec USA: Branch serving Eastern and Central USA Ph: (603) 444-2103 Fax: (603) 444-0327

We reserve the right to change specifications and to improve our products without notice or obligation.

07006-3006
19/09/18 D.L.

ROTOBEC
TOUGH HANDLING EQUIPMENT

Combination Grapple
080C RT-222

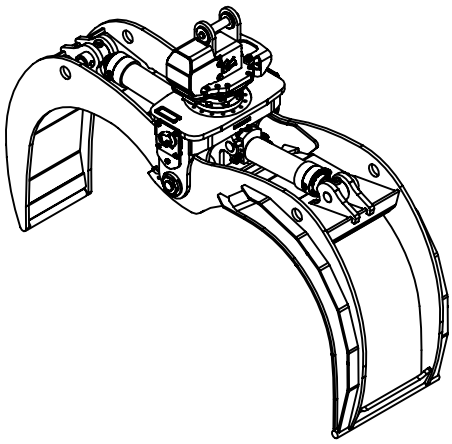

Max load:	n/a lb	n/a kg
Volume:	.54 cord of 8 ft	1.96 m^3
Area tip to tip:	8.61 ft^2	.80 m^2
Rotator lifting capacity:	22000 lb	9979 kg
Torque at relief pressure:	10700 lb-in 913 psi	1209 Nm 63 bars
Weight:	1815 lb	823 kg

Rotator	**Maximum pressure:** 5000 psi 345 bars	**Recommended flow:** 10 gpm 38 l/min
Rotator recommended flow will produce a maximum speed of 30 rpm		

Cylinder	Diameter	Recommended pressure	Pressure range	Flow range	Lock valves
Standard	3 1/2 " (89 mm)	4250 psi (293 bars)	3500-5000 psi (241-345 bars)	16-24 gpm (61-91 l/min.)	no

Grapple cylinder maximum flow will theoretically produce a complete grapple open/close cycle in 4 seconds.

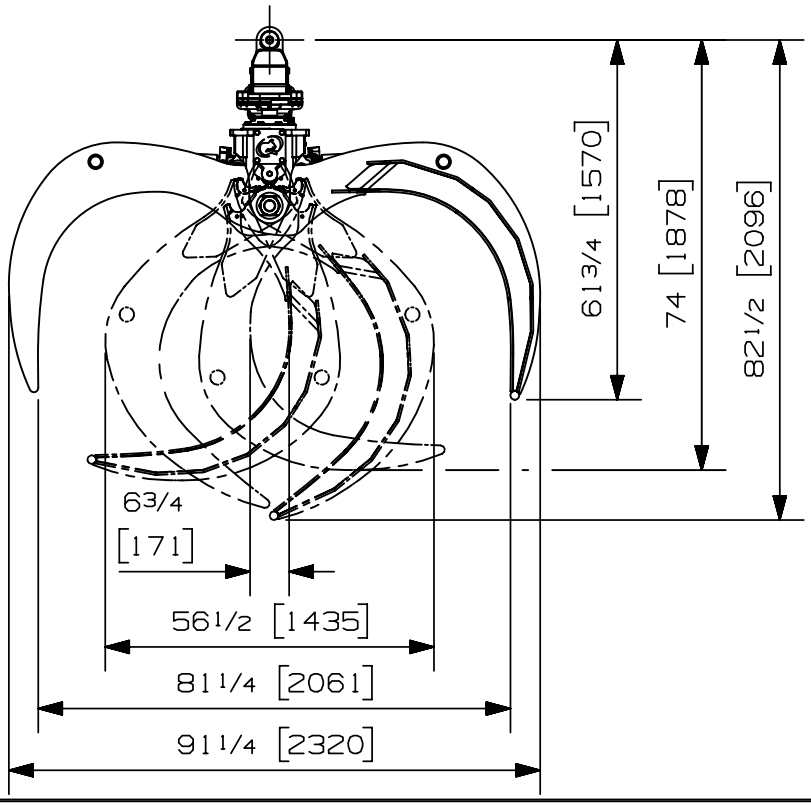

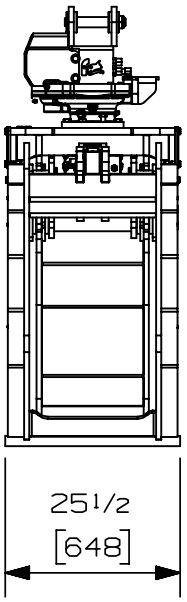

Options:
- Leveling plate (100 lbs / 45 kg)
- Load holding valve on cylinders (9 lbs / 4 kg)
-
-

web site: www.rotobec.com **email: rotobec@rotobec.com**

Rotobec Inc.: Head office serving OEM's and Eastern Canada Ph: (418) 383-3002 Fax: (418) 383-5334
Rotobec West: Branch serving Western Canada and Western USA Ph: (250) 765-1161 Fax: (250) 765-0035
Rotobec USA: Branch serving Eastern and Central USA Ph: (603) 444-2103 Fax: (603) 444-0327

We reserve the right to change specifications and to improve our products without notice or obligation.

07003-2643
22/08/18 D.L.

ROTOBEC
TOUGH HANDLING EQUIPMENT

Combination Grapple
080C RT-252

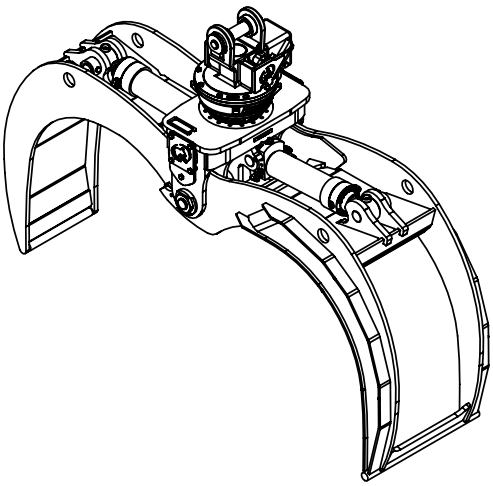

Max load:	n/a lb	n/a kg
Volume:	.54 cord 8 of ft	1.95 m^3
Area tip to tip:	8.61 ft^2	.80 m^2
Rotator lifting capacity:	25000 lb	11340 kg
Torque at relief pressure:	16150 lb-in 1450 psi	1825 Nm 100 bars
Weight:	1860 lb	844 kg

Rotator	**Maximum pressure:** 5000 psi 345 bars	**Recommended flow:** 9 gpm 34 l/min
Rotator recommended flow will produce a speed of 30 rpm		

Cylinder	Diameter	Recommended pressure	Pressure range	Flow range	Lock valves
Standard	3 1/2 " (89 mm)	4250 psi (293 bars)	3500-5000 psi (241-345 bars)	16-24 gpm (61-91 l/min.)	no

Grapple cylinder maximum flow will theoretically produce a complete grapple open/close cycle in 4 seconds.

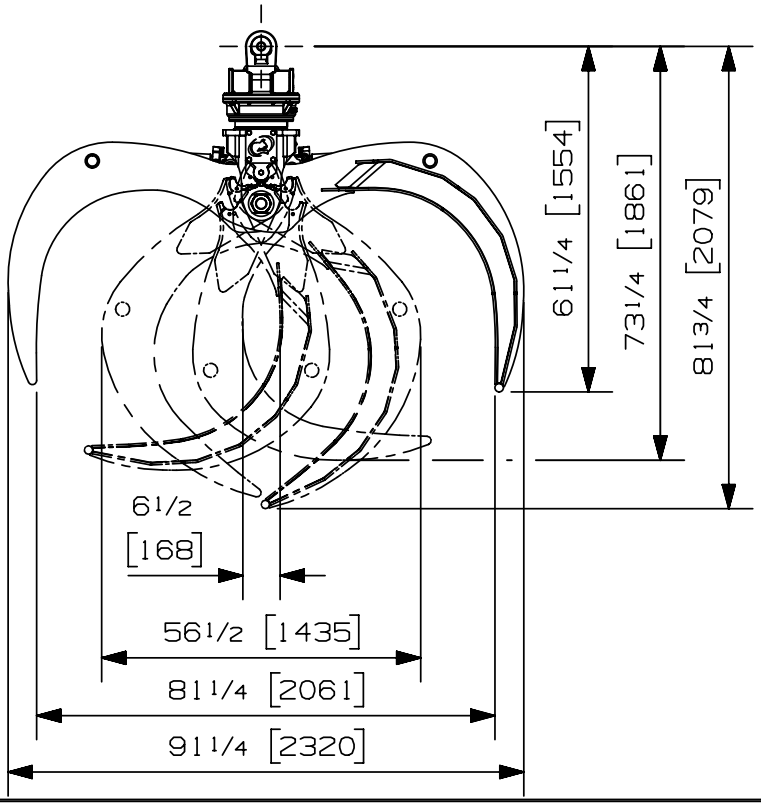

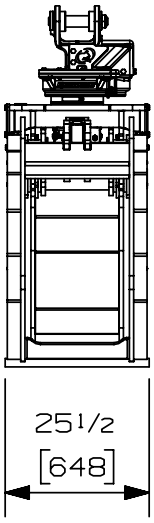

Options:
- Leveling plate (100 lbs / 45 kg)
- Load holding valve on cylinders (9 lbs / 4 kg)
-
-

web site: www.rotobec.com **email: rotobec@rotobec.com**

Rotobec Inc.: Head office serving OEM's and Eastern Canada Ph: (418) 383-3002 Fax: (418) 383-5334
Rotobec West: Branch serving Western Canada and Western USA Ph: (250) 765-1161 Fax: (250) 765-0035
Rotobec USA: Branch serving Eastern and Central USA Ph: (603) 444-2103 Fax: (603) 444-0327

We reserve the right to change specifications and to improve our products without notice or obligation.

07002-8246
22/08/18 D.L.

ROTOBEC
TOUGH HANDLING EQUIPMENT

Combination Grapple
080C RT-322-HT

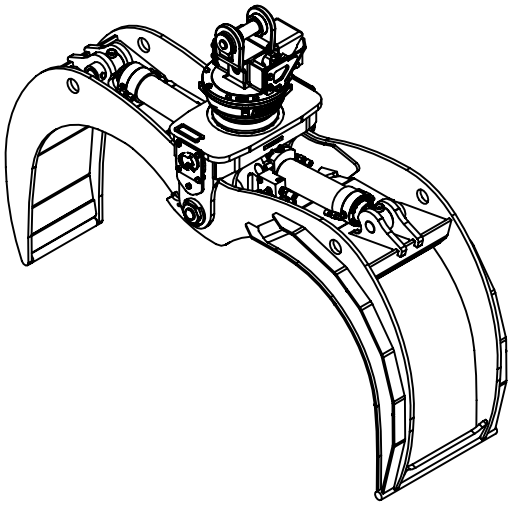

Max load:	n/a lb	n/a kg
Volume:	.54 cord 8 ft	1.96 m^3
Area tip to tip:	8.61 ft^2	.80 m^2
Rotator lifting capacity:	32000 lb	14515 kg
Torque at relief pressure:	20160 lb-in 1810 psi	2278 Nm 125 bars
Weight:	1905 lb	864 kg

Rotator	**Maximum pressure:** 5000 psi 345 bars	**Recommended flow:** 9 gpm 34 l/min
Rotator recommended flow will produce a speed of 30 rpm		

Cylinder	Diameter	Recommended pressure	Pressure range	Flow range	Lock valves
Standard	3 1/2 " (89 mm)	4250 psi (293 bars)	3500-5000 psi (241-345 bars)	16-24 gpm (61-91 l/min.)	no

Grapple cylinder maximum flow will theoretically produce a complete grapple open/close cycle in 4 seconds.

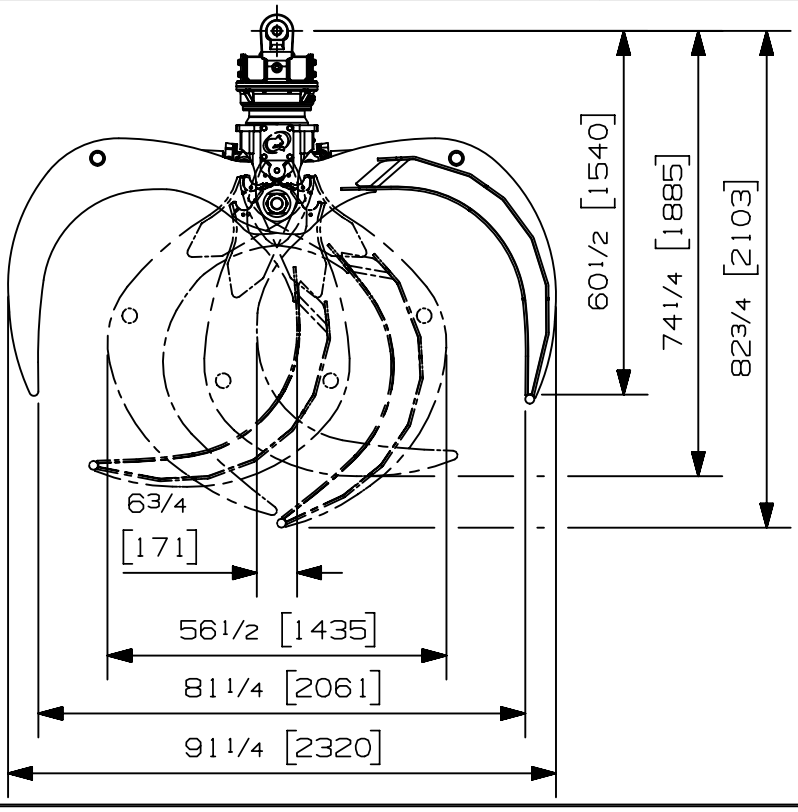

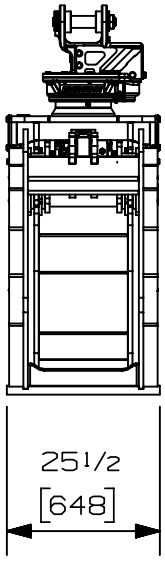

Options:
- Leveling plate (100 lbs / 45 kg)
- Load holding valve on cylinders (9 lbs / 4 kg)
-
-

web site: www.rotobec.com **email: rotobec@rotobec.com**

Rotobec Inc.: Head office serving OEM's and Eastern Canada Ph: (418) 383-3002 Fax: (418) 383-5334
Rotobec West: Branch serving Western Canada and Western USA Ph: (250) 765-1161 Fax: (250) 765-0035
Rotobec USA: Branch serving Eastern and Central USA Ph: (603) 444-2103 Fax: (603) 444-0327

We reserve the right to change specifications and to improve our products without notice or obligation.

07008-0395
19/09/18 D.L.

ROTOBEC
TOUGH HANDLING EQUIPMENT

Combination Grapple
080C RT-502-STDHT

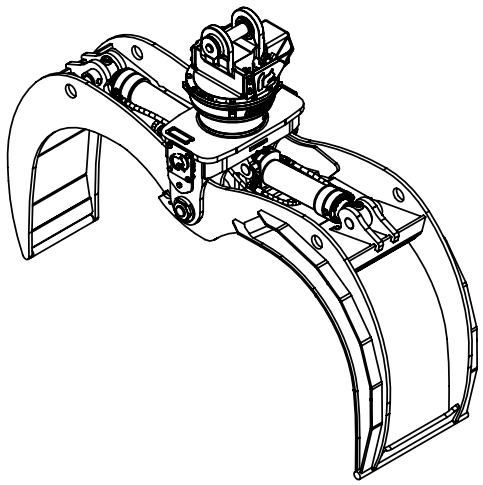

Max load:	n/a lb	n/a kg
Volume:	.54 cord 8 ft	1.95 m^3
Area tip to tip:	8.61 ft^2	.80 m^2
Rotator lifting capacity:	50000 lb	22680 kg
Torque at relief pressure:	23260 lb-in 1810 psi	2628 Nm 125 bars
Weight:	2045 lb	928 kg

Rotator	**Maximum pressure:** 5000 psi 345 bars	**Recommended flow:** 9 gpm 34 l/min
Rotator recommended flow will produce a speed of 25 rpm		

Cylinder	Diameter	Recommended pressure	Pressure range	Flow range	Lock valves
Standard	3 1/2 " (89 mm)	4250 psi (293 bars)	3500-5000 psi (241-345 bars)	16-24 gpm (61-91 l/min.)	no

Grapple cylinder maximum flow will theoretically produce a complete grapple open/close cycle in 4 seconds.

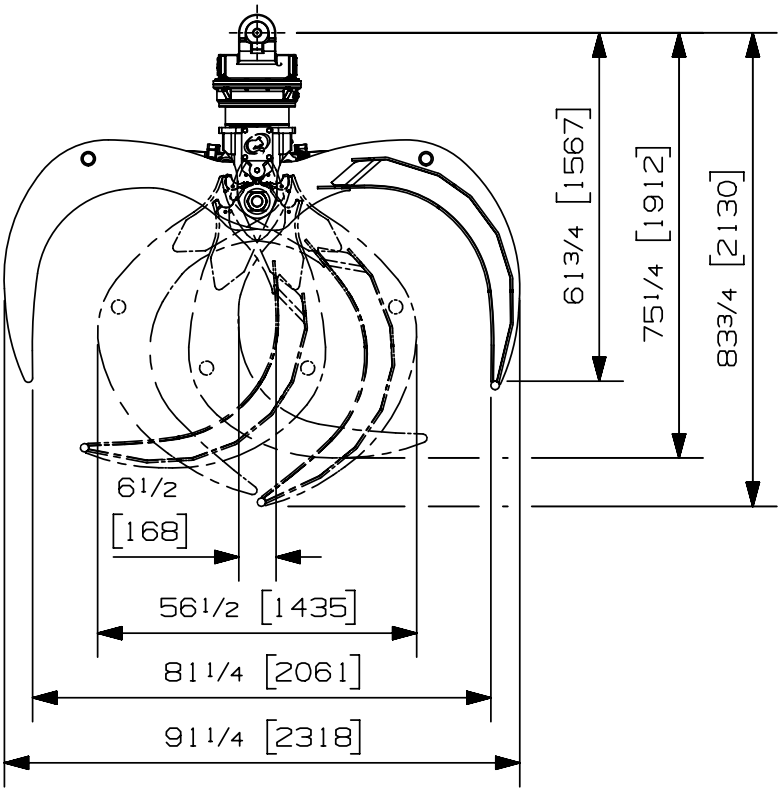

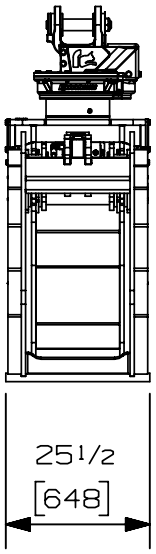

Options:
- Leveling plate (100 lbs / 45 kg)
- Load Holding valves on cylinders (9 lbs / 4 kg)
-
-

web site: www.rotobec.com **email: rotobec@rotobec.com**

Rotobec Inc.: Head office serving OEM's and Eastern Canada Ph: (418) 383-3002 Fax: (418) 383-5334
Rotobec West: Branch serving Western Canada and Western USA Ph: (250) 765-1161 Fax: (250) 765-0035
Rotobec USA: Branch serving Eastern and Central USA Ph: (603) 444-2103 Fax: (603) 444-0327

We reserve the right to change specifications and to improve our products without notice or obligation.

07006-3017
07/09/18 D.L.

ROTOBEC
TOUGH HANDLING EQUIPMENT

Combination Grapple
060C RT-222

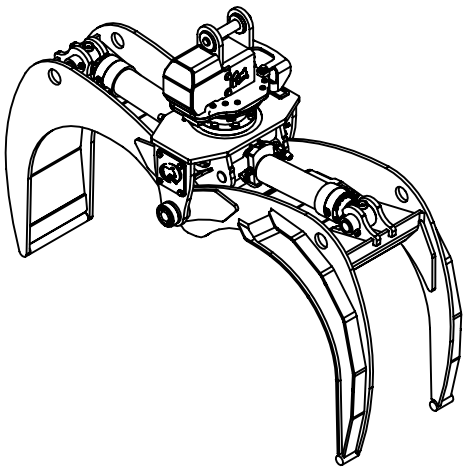

Max load:	n/a lb	n/a kg
Volume:	.40 cord of 8 ft	1.45 m^3
Area tip to tip:	6.50 ft^2	.60 m^2
Rotator lifting capacity:	22000 lb	9979 kg
Torque at relief pressure:	10700 lb-in 913 psi	1209 Nm 63 bars
Weight:	1310 lb	594 kg

Rotator	**Maximum pressure:** 5000 psi 345 bars	**Recommended flow:** 10 gpm 38 l/min
Rotator recommended flow will produce a maximum speed of 30 rpm		

Cylinder	Diameter	Recommended pressure	Pressure range	Flow range	Lock valves
Standard	3 " (76 mm)	4300 psi (296 bars)	3600-5000 psi (248-345 bars)	11-17 gpm (42-64 l/min.)	no
Standard	3 1/2 " (89 mm)	3000 psi (207 bars)	2500-3500 psi (172-241 bars)	16-25 gpm (61-95 l/min.)	no

Grapple cylinder maximum flow will theoretically produce a complete grapple open/close cycle in 4 seconds.

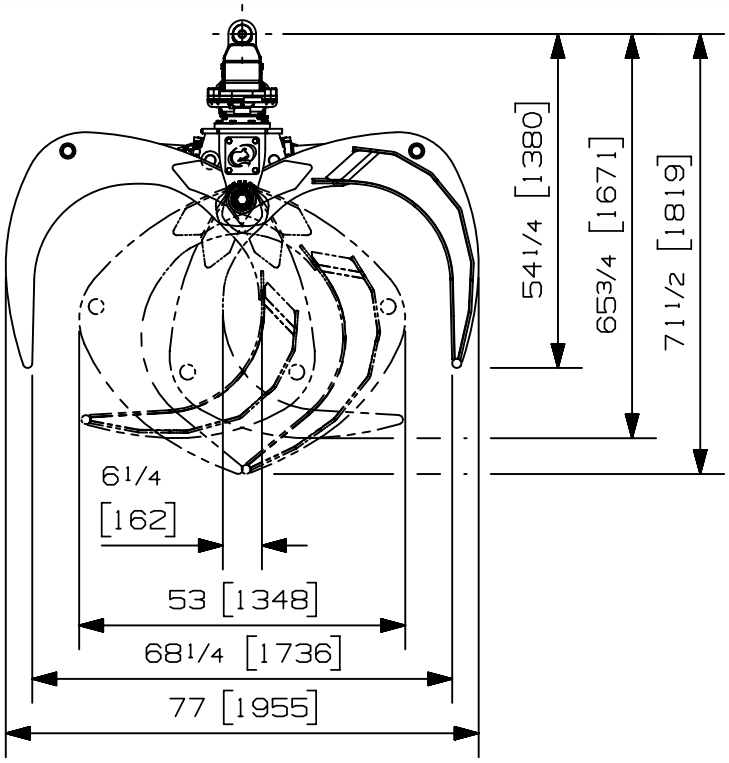

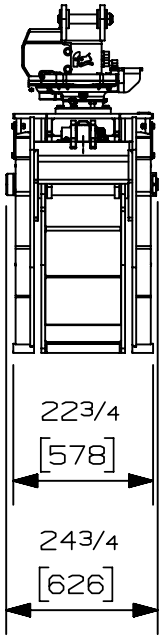

Options:
- Leveling plate (N/A)
- Closed wide jaw (35 lbs / 16 kg)
- Load holding valve on cylinders (7 lbs / 3 kg)
-

web site: www.rotobec.com **email: rotobec@rotobec.com**

Rotobec Inc.: Head office serving OEM's and Eastern Canada Ph: (418) 383-3002 Fax: (418) 383-5334
Rotobec West: Branch serving Western Canada and Western USA Ph: (250) 765-1161 Fax: (250) 765-0035
Rotobec USA: Branch serving Eastern and Central USA Ph: (603) 444-2103 Fax: (603) 444-0327

We reserve the right to change specifications and to improve our products without notice or obligation.

07006-8783
15/08/18 D.L.

ROTOBEC
TOUGH HANDLING EQUIPMENT

Combination Grapple
060C RT-252

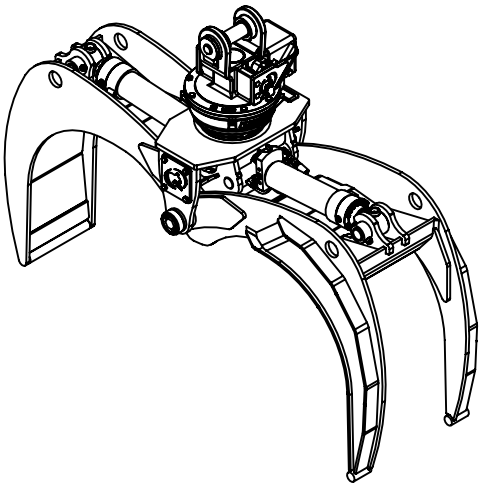

Max load:	n/a lb	n/a kg
Volume:	.40 cord of 8 ft	1.45 m^3
Area tip to tip:	6.50 ft^2	.60 m^2
Rotator lifting capacity:	25000 lb	11340 kg
Torque at relief pressure:	16150 lb-in 1450 psi	1825 Nm 100 bars
Weight:	1355 lb	615 kg

Rotator	**Maximum pressure:** 5000 psi 345 bars	**Recommended flow:** 9 gpm 34 l/min
Rotator recommended flow will produce a maximum speed of 30 rpm		

Cylinder	Diameter	Recommended pressure	Pressure range	Flow range	Lock valves
Standard	3 " (76 mm)	4300 psi (296 bars)	3600-5000 psi (248-345 bars)	11-17 gpm (42-64 l/min.)	no
Standard	3 1/2 " (89 mm)	3000 psi (207 bars)	2500-3500 psi (172-241 bars)	16-25 gpm (61-95 l/min.)	no

Grapple cylinder maximum flow will theoretically produce a complete grapple open/close cycle in 4 seconds.

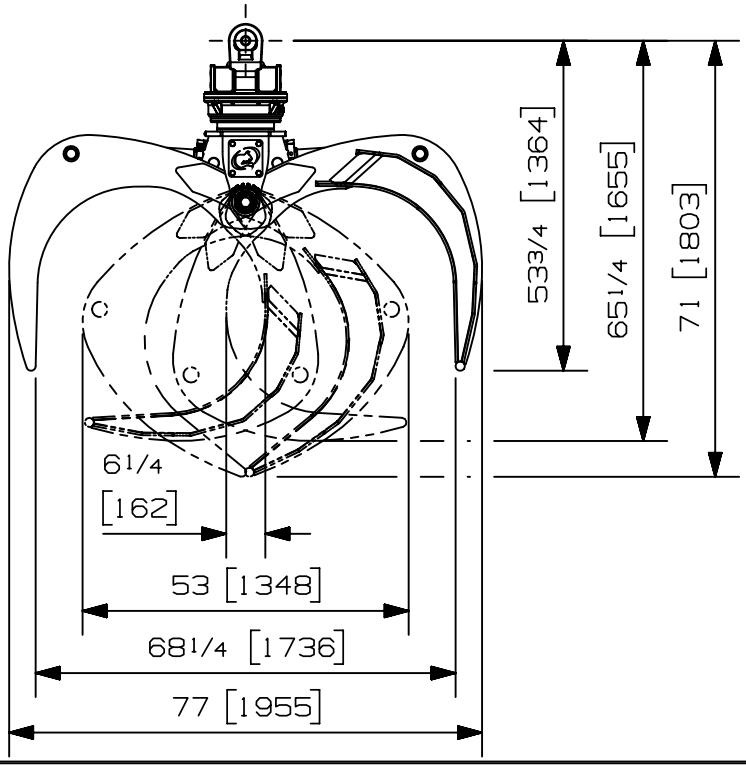

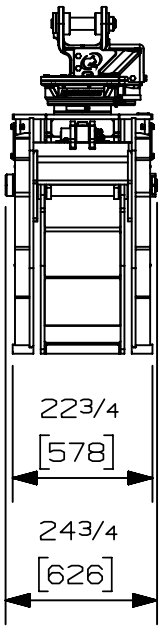

Options:
- Leveling plate (N/A)
- Closed wide jaw (35 lbs / 16 kg)
- Load holding valve on cylinders (7 lbs / 3 kg)
-

web site: www.rotobec.com **email: rotobec@rotobec.com**

Rotobec Inc.: Head office serving OEM's and Eastern Canada Ph: (418) 383-3002 Fax: (418) 383-5334
Rotobec West: Branch serving Western Canada and Western USA Ph: (250) 765-1161 Fax: (250) 765-0035
Rotobec USA: Branch serving Eastern and Central USA Ph: (603) 444-2103 Fax: (603) 444-0327

We reserve the right to change specifications and to improve our products without notice or obligation.

07002-8177
15/08/18 D.L.

ROTOBEC
TOUGH HANDLING EQUIPMENT

Combination Grapple
060C RT-322-MT

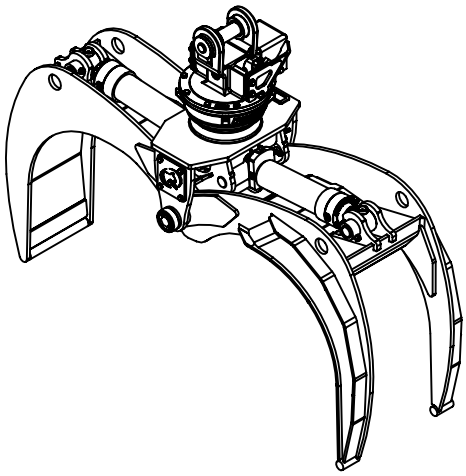

Max load:	n/a lb	n/a kg
Volume:	.40 cord of 8 ft	1.45 m^3
Area tip to tip:	6.50 ft^2	.60 m^2
Rotator lifting capacity:	32000 lb	14515 kg
Torque at relief pressure:	16150 lb-in 1450 psi	1825 Nm 100 bars
Weight:	1400 lb	635 kg

Rotator	**Maximum pressure:** 5000 psi 345 bars	**Recommended flow:** 9 gpm 34 l/min
Rotator recommended flow will produce a speed of 30 rpm		

Cylinder	Diameter	Recommended pressure	Pressure range	Flow range	Lock valves
Standard	3 " (76 mm)	4300 psi (296 bars)	3600-5000 psi (248-345 bars)	11-17 gpm (42-64 l/min.)	no
Standard	3 1/2 " (89 mm)	3000 psi (207 bars)	2500-3500 psi (172-241 bars)	16-25 gpm (61-95 l/min.)	no

Grapple cylinder maximum flow will theoretically produce a complete grapple open/close cycle in 4 seconds.

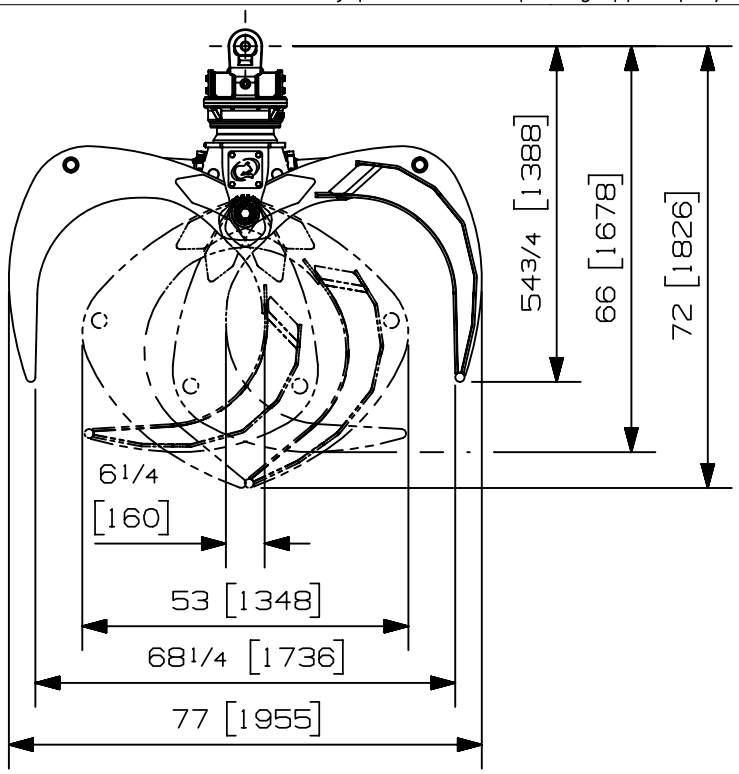

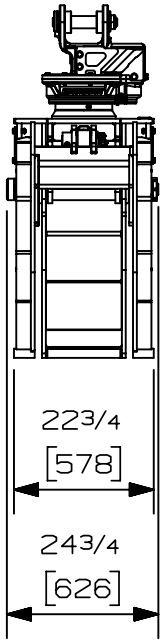

Options:
- Leveling plate (N/A)
- Closed wide jaw (35 lbs / 16 kg)
- Load holding valve on cylinders (7 lbs / 3 kg)
-

web site: www.rotobec.com **email: rotobec@rotobec.com**

Rotobec Inc.: Head office serving OEM's and Eastern Canada Ph: (418) 383-3002 Fax: (418) 383-5334
Rotobec West: Branch serving Western Canada and Western USA Ph: (250) 765-1161 Fax: (250) 765-0035
Rotobec USA: Branch serving Eastern and Central USA Ph: (603) 444-2103 Fax: (603) 444-0327

We reserve the right to change specifications and to improve our products without notice or obligation.

07006-5645
15/08/18 D.L.